	REVISED	DR	APP

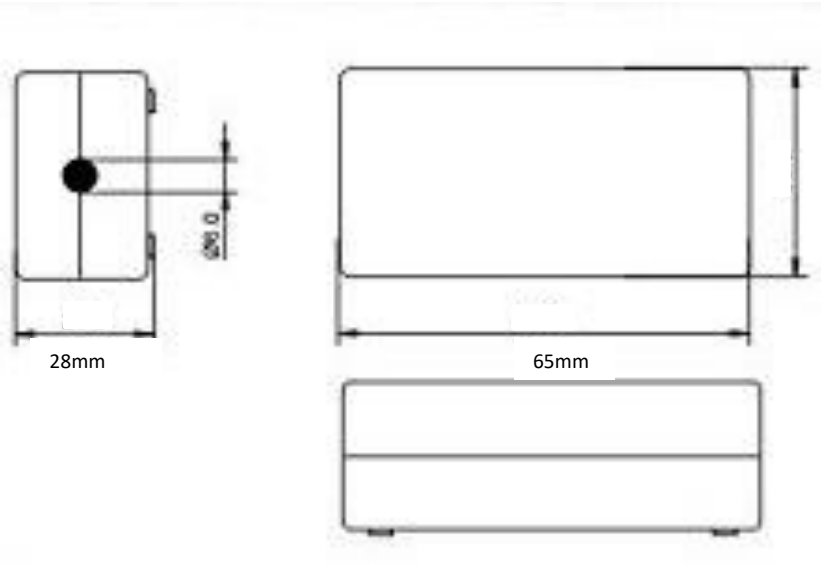

75000

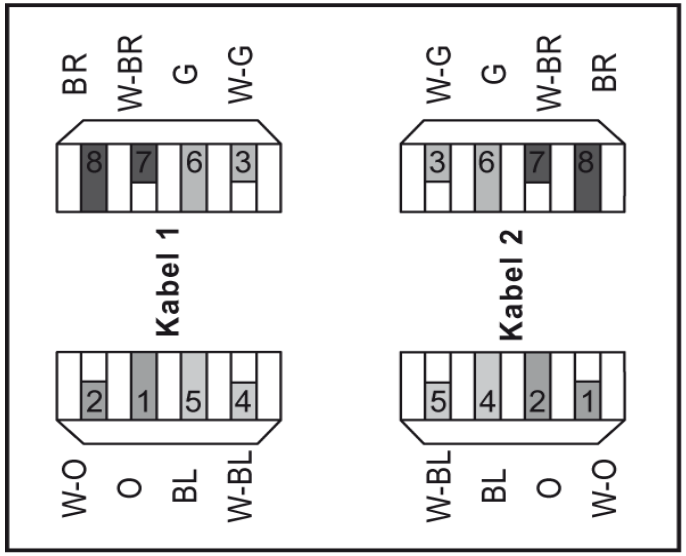

1	CONNECTORS	CAT 5E LSA CONNECTION BOX
2	MOLDING	
3	CABLE	PLASTIC HOUSING, METALLIZED
NO	PART NAME	

RoHS compliant

S-Conn Handels GmbH
Am Mühlberg 8
91477 Markt Bibart
Tel. 09162/ 98 93 8-0
Fax 09162/ 98 93 8-20
info@s-conn.de
S/CONN
maximum connectivity
www.s-conn.de

DESCRIPTION	CAT 5E LSA CONNECTION BOX						
SIZE	A4	DATE		CHECKED		TOL	75000
UNIT	MM	DRAWN		APPROVED			
CUSTOM TARIF NO.: 85366990990							