EN:

Item number: 1530761

MC POWER

Surface-mounted push button McPower „Finery“

250V~/10A

TECHNICAL DETAILS: · Surface-mounted push button with flat rocker · 250V/10A · Dimensions: 60x60x50mm

SAFETY INSTRUCTIONS: Keep the operating instructions for the appliance in a safe place. Check the appliance regularly for damage. Do not modify the product or accessories. Do not insert any objects into connection sockets. The product is not suitable for outdoor use. Do not short-circuit the connections. Only use the product if it is in perfect condition. Never operate a defective device! The appliance must not be modified in any way. Risk of electric shock and accident! Avoid extreme loads such as extreme heat or cold, moisture, microwaves, mechanical pressure and vibrations. Avoid overloading the socket : Do not connect several high-current devices at the same time. Overloaded sockets can lead to overheating and a fire hazard. **Disconnect the mains power supply before connecting. Electrical work, installation and repairs may only be carried out by qualified electricians. Avoid inserting metal objects or fingers into the socket to prevent a short circuit or electric shock - DANGER TO LIFE!** Only wipe the appliance with a soft, dry cloth. Never use scouring powder or chemical cleaning agents. Electrical components must not come into contact with moisture. Do not kink, crush, pinch or otherwise damage the cables. If you have any questions, defects, mechanical damage or other problems, please contact the dealer or manufacturer. If you have any doubts about the safety of the socket or if it is not working properly, have it checked by a qualified electrician and repaired if necessary. The product is not a toy and does not belong in the hands of children! Please note that the product, packaging, plastic film / bags, polystyrene parts, etc. are not suitable for children. Small parts and insulating material can become a dangerous toy for children and pose a hazard.

ASSEMBLY

1. Turn off the circuit breaker and check for voltage-free conditions. **2.** Remove the switch cover. **3.** Open the enclosure. **4.** Secure the enclosure in place with appropriate screws. **5.** Prepare the enclosure by creating openings for the cable entry at the designated locations and deburring them. **6.** Properly strip the cable inside the enclosure and strip approximately 10 mm of insulation from the wire ends. **7.** Make the connection as shown in the diagram, ensuring that no wires are incorrectly clamped and no strands are protruding or exposed. **8.** Place the enclosure onto the mounted electrical components, ensuring that the cables are properly positioned inside the enclosure. **9.** Reattach the front cover and snap the switch cover onto the switch.

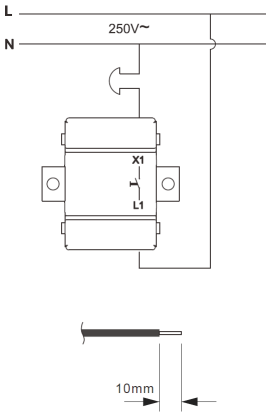

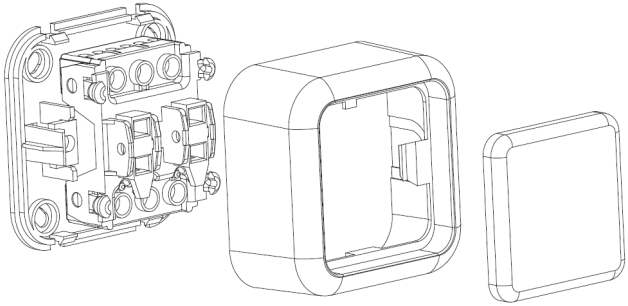

DISPOSAL INSTRUCTIONS: By separating, recycling and disposing of old appliances in this way, you are making an important contribution to protecting our environment. Packaging can be disposed of free of charge in accordance with local regulations at the appropriate collection centres. According to the European WEEE Directive, electrical and electronic appliances may not be disposed of with household waste. Their components must be recycled or disposed of separately, as toxic and hazardous components can cause lasting damage to health and the environment if disposed of improperly. As a consumer, you are obliged under the German Electrical and Electronic Equipment Act (ElektroG) to return electrical and electronic equipment free of charge at the end of its life to the manufacturer, the point of sale or to public collection centres set up for this purpose. Details are regulated by the respective state law. The wheeled bin symbol on the product, operating instructions and/or packaging indicates these regulations.



DE: Eine mehrsprachige Version dieser Anleitung und die Konformitätserklärung finden Sie unter folgendem Link:
EN: A multilingual version of this manual and the Declaration of Conformity can be found at the following link:
FR: Vous trouverez une version multilingue de ce manuel et la déclaration de conformité sur le lien suivant:
ES: Encontrará una versión multilingüe de estas instrucciones y de la declaración de conformidad en el siguiente enlace:

http://ettgroup.de/product/1530761

Made by ETT Distribution GmbH, Schmalbachstraße 16, 38112 Braunschweig

CE

Status: 11/2024

ett-online.de | Tel. +49 531 58 11 00 | service@ett-online.de

Reproduction or duplication only with express authorisation.